CIGWELD

AN ESAB BRAND

100+ YEARS OF WELDING INNOVATION



DURAGUIDE

The CIGWELD DuraGuide Range is a professional-grade cutting guide system designed to deliver greater precision, stability and control across straight-line, circle and bevel cutting applications. Engineered to minimise cutting inconsistencies and improve overall cut quality, the DuraGuide range provides a versatile solution for achieving smooth, accurate cuts with a wide variety of gas and plasma cutting torches in demanding workshop and industrial environments.

FEATURES & BENEFITS:

ACCURATE STRAIGHT-LINE CUTTING:

Roller and circle guide configurations support smooth, controlled torch movement along a straight edge for accurate straight-line cuts. Adjustable guide positions help maintain a consistent cutting path and tip-to-work distance, reducing unwanted torch movement and improving overall cut quality.

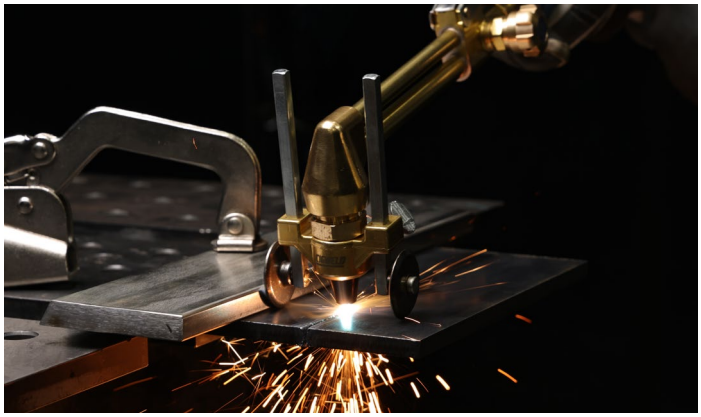

CONTROLLED BEVEL CUTTING:

Adjustable roller guide heights allow the torch to be positioned at the required cutting angle for straight-bevel applications. Designed to maintain stable torch positioning and consistent tip to work distance, helping achieve smoother movement, greater cutting control and improved bevel cut quality.

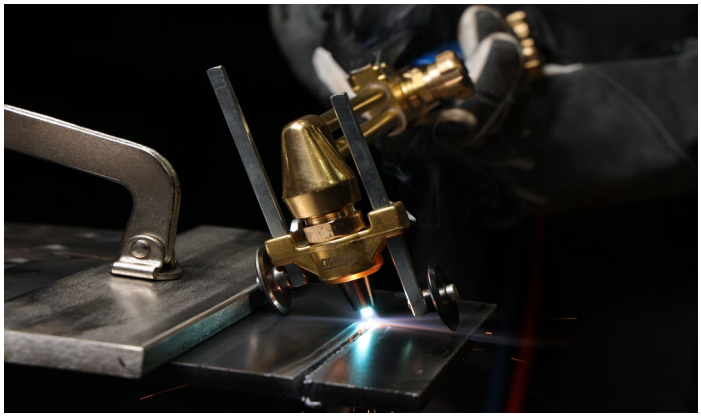

PRECISE CIRCLE CUTTING:

Adjustable guide components allow accurate cutting of small and large diameter circles, with flexible radius settings to suit different cutting requirements. Magnetic and suction pivot options help maintain a stable centre point for smoother torch movement, improved cutting accuracy and cleaner circular cuts.

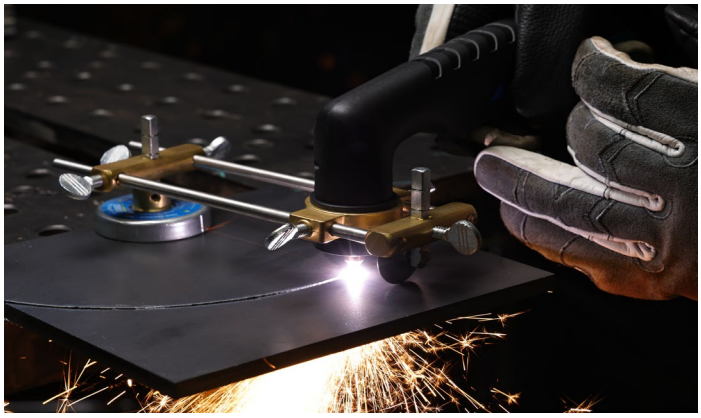

PORTABLE & PROTECTED:

DuraGuide Guide Kits are supplied in durable hard carry cases, keeping cutting guides and accessories securely organised and protected for convenient storage and transportation. With kits available to suit multiple gas and plasma cutting torch setups, they bring together essential components in one practical, versatile solution for straight-line, circle and bevel cutting applications.



DURABLE CONSTRUCTION & EASY SETUP:

Built with durable materials to withstand demanding workshop and industrial environments. Featuring adjustable guide components and a straightforward assembly design, DuraGuide allows for easy setup and configuration to suit different cutting applications, providing long-lasting performance and versatility.

MULTIPLE CUTTING CONFIGURATIONS:

Versatile guide components can be arranged and adjusted to suit a wide range of cutting applications, including straight-line, bevel, small and large diameter circle, edge and offset cutting. Interchangeable components and adjustable guide positions allow users to customise their setup for different cutting requirements, providing greater flexibility, control and precision.

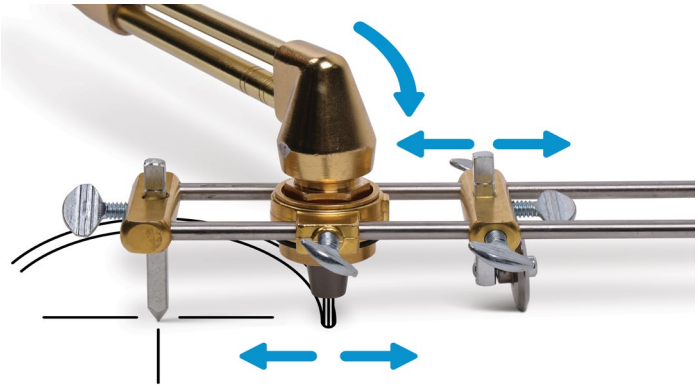

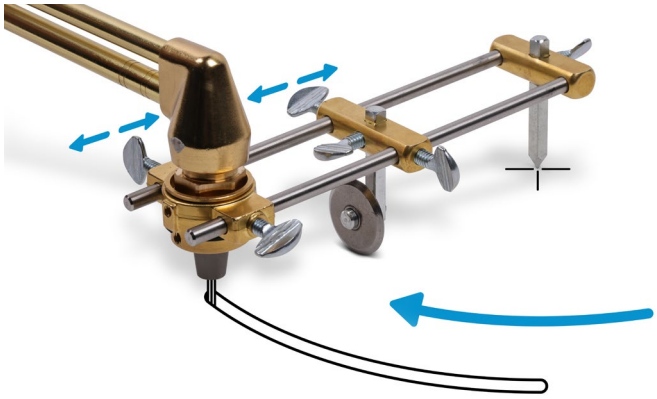

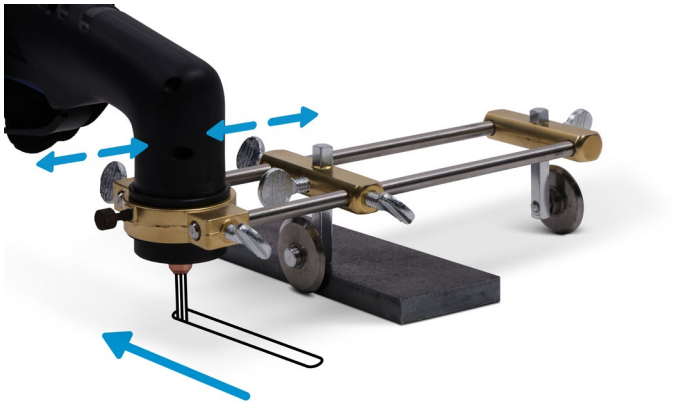

GAS CUTTING TORCH COMPATIBILITY

TO SUIT: CIGWELD STYLE TYPE 41/44 TORCHES

- COMET 3 CUTTING ATTACHMENT



- BLUEJET CUTTING ATTACHMENT



- BLUEJET SABRE MULTIPURPOSE TORCH



ORDERING INFORMATION

	Part Number	Description	Contents
	208575	DURAGUIDE BEVEL ATTACHMENT TO SUIT: TYPE 41/44 TORCHES	• BEVEL ATTACHMENT • TYPE 41/44 TORCH ADAPTOR BUSH • FASTENERS • ALLEN KEY
	208584	DURAGUIDE ROLLER GUIDE TO SUIT: TYPE 41/44 TORCHES	• ROLLER GUIDE BODY • GUIDE WHEELS • FASTENERS
	208581	DURAGUIDE CIRCLE GUIDE TO SUIT: TYPE 41/44 TORCHES	• CIRCLE GUIDE FRAME • TYPE 41/44 TORCH ATTACHMENT • GUIDE WHEELS • RADIUS ARM • OFFSET PIN • FASTENERS
	208579	DURAGUIDE GUIDE KIT TO SUIT: TYPE 41/44 TORCHES	• CIRCLE GUIDE KIT • ROLLER GUIDE • RADIUS BAR • GUIDE WHEELS • MAGNETIC PIVOT • BEVEL ATTACHMENT • LINK NUT • STRAIGHT & OFFSET PINS • FASTENERS

GAS CUTTING TORCH COMPATIBILITY

TO SUIT: VICTOR STYLE TORCH

• COMET MULTI PURPOSE 3 CUTTING TORCH



ORDERING INFORMATION

	Part Number	Description	Contents
	208609	DURAGUIDE BEVEL ATTACHMENT TO SUIT: VICTOR STYLE TORCH	• BEVEL ATTACHMENT • VICTOR STYLE TORCH ADAPTOR BUSH • FASTENERS • ALLEN KEY
	208585	DURAGUIDE ROLLER GUIDE TO SUIT: VICTOR STYLE TORCH	• ROLLER GUIDE BODY • GUIDE WHEELS • FASTENERS
	208582	DURAGUIDE CIRCLE GUIDE TO SUIT: VICTOR STYLE TORCH	• GUIDE WHEELS • VICTOR STYLE TORCH ATTACHMENT • RADIUS BAR AND PINS • FASTENERS
	208580	DURAGUIDE GUIDE KIT TO SUIT: VICTOR STYLE TORCH	• CIRCLE GUIDE KIT • ROLLER GUIDE • RADIUS BAR • GUIDE WHEELS • MAGNETIC PIVOT • SUCTION PIVOT • BEVEL ATTACHMENT • LINK NUT • STRAIGHT & OFFSET PINS • FASTENERS

PLASMA CUTTING TORCH COMPATIBILITY

TO SUIT: BLUEVENOM 60A TORCH



ORDERING INFORMATION

	Part Number	Description	Contents
	208594	DURAGUIDE ADAPTER BUSH TO SUIT: BLUEVENOM 60A TORCH	• BLUEVENOM 60A TORCH CIRCLE GUIDE ADAPTER BUSH • FASTENERS • SNAP RING
	208598	DURAGUIDE ROLLER GUIDE TO SUIT: BLUEVENOM 60A TORCH	• ROLLER GUIDE BODY • GUIDE WHEELS • FASTENERS
	208588	DURAGUIDE CIRCLE GUIDE TO SUIT: BLUEVENOM 60A TORCH	• CIRCLE GUIDE FRAME • BLUEVENOM 60A TORCH ATTACHMENT • GUIDE WHEELS • RADIUS ARM • OFFSET PIN • FASTENERS
	208595	DURAGUIDE GUIDE KIT TO SUIT: BLUEVENOM 60A TORCH	• CIRCLE GUIDE KIT • ROLLER GUIDE • RADIUS BAR • GUIDE WHEELS • MAGNETIC PIVOT • SUCTION PIVOT • LINK NUT • STRAIGHT & OFFSET PINS • FASTENERS

PLASMA CUTTING TORCH COMPATIBILITY

TO SUIT: BLUEVENOM PCX 85A/125A TORCHES



ORDERING INFORMATION

	Part Number	Description	Contents
	208612	DURAGUIDE ADAPTER BUSH TO SUIT: BLUEVENOM PCX 85A/125A TORCHES	• BLUEVENOM PCX 85A/125A TORCH CIRCLE GUIDE ADAPTER BUSH • FASTENERS • SNAP RING
	208614	DURAGUIDE ROLLER GUIDE TO SUIT: BLUEVENOM PCX 85A/125A TORCHES	• ROLLER GUIDE BODY • GUIDE WHEELS • FASTENERS
	208613	DURAGUIDE CIRCLE GUIDE TO SUIT: BLUEVENOM PCX 85A/125A TORCHES	• CIRCLE GUIDE FRAME • BLUEVENOM PCX 85A/125A TORCH ATTCHMENT • GUIDE WHEELS • RADIUS ARM • OFFSET PIN • FASTENERS
	208615	DURAGUIDE GUIDE KIT TO SUIT: BLUEVENOM PCX 85A/125A TORCHES	• CIRCLE GUIDE KIT • ROLLER GUIDE • RADIUS BAR • GUIDE WHEELS • MAGNETIC PIVOT • SUCTION PIVOT • LINK NUT • STRAIGHT & OFFSET PINS • FASTENERS

PLASMA CUTTING TORCH COMPATIBILITY

TO SUIT: THERMAL DYNAMICS 1TORCH SL60/SL100



ORDERING INFORMATION

	Part Number	Description	Contents
	208593	DURAGUIDE ADAPTER BUSH TO SUIT: THERMAL DYNAMICS 1TORCH SL60/SL100	• THERMAL DYNAMICS 1TORCH SL60/SL100 CIRCLE GUIDE ADAPTER BUSH • FASTENERS • SNAP RING
	208597	DURAGUIDE ROLLER GUIDE TO SUIT: THERMAL DYNAMICS 1TORCH SL60/SL100	• ROLLER GUIDE BODY • GUIDE WHEELS • FASTENERS
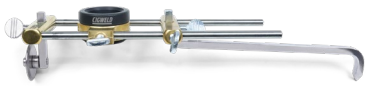	208590	DURAGUIDE CIRCLE GUIDE TO SUIT: THERMAL DYNAMICS1TORCH SL60/SL100	• CIRCLE GUIDE FRAME • THERMAL DYNAMICS1TORCH SL60/SL100 ATTACHMENT • GUIDE WHEELS • RADIUS ARM • OFFSET PIN • FASTENERS
	208596	DURAGUIDE GUIDE KIT TO SUIT: THERMAL DYNAMICS 1TORCH SL60/SL100	• CIRCLE GUIDE KIT • ROLLER GUIDE • RADIUS BAR • GUIDE WHEELS • MAGNETIC PIVOT • SUCTION PIVOT • LINK NUT • STRAIGHT & OFFSET PINS • FASTENERS

ADDITIONAL ACCESSORIES

MAGNETIC BASE & ACCURATE POSITIONING:

Features a strong magnetic base for secure positioning on steel surfaces without drilling. Integrated alignment marks allow easy positioning for accurate and controlled circle cutting.



P/N : 208591

SUCTION BASE & SECURE POSITIONING:

Features a suction base for secure positioning on suitable non-magnetic surfaces without drilling. The grip-and-turn mechanism allows easy attachment and release for accurate and controlled circle cutting.



P/N : 208610

EXTENDED CUTTING RANGE & FLEXIBILITY:

Designed for larger diameter circle cutting, with adjustable positioning to suit different torch guide heights. Additional radius bars can be connected to extend the cutting range for greater flexibility.



P/N : 208592

ORDERING INFORMATION

Part Number	Description	Contents	Compatible With
208591	DURAGUIDE MAGNETIC PIVOT	• MGNETIC PIVOT • STRAIGHT PIN • LINK NUT • FASTENERS	DURAGUIDE RADIUS BAR KIT & CIRCLE GUIDES
208610	DURAGUIDE SUCTION PIVOT	• SUCTION PIVOT • STRAIGHT PIN • CONNECTION RING	DURAGUIDE RADIUS BAR KIT & CIRCLE GUIDES
208592	DURAGUIDE RADIUS BAR KIT	• 350MM (14”) RADIUS BAR • STRAIGHT PIN • LINK NUT • FASTENERS	DURAGUIDE MAGNETIC PIVOT / SUCTION PIVOT/ CIRCLE GUIDES & ROLLER GUIDES